8. Exploded Views and Parts List (Basic Model)

8-1. Main Assembly

8-2. Frame Assembly

8-3. MP Assembly

8-4. Fuser Unit Assembly

8-5. RX Driver Unit Assembly

8-6. Cassette Unit Assembly

IT-Spares.eu

8.1 Main Assembly

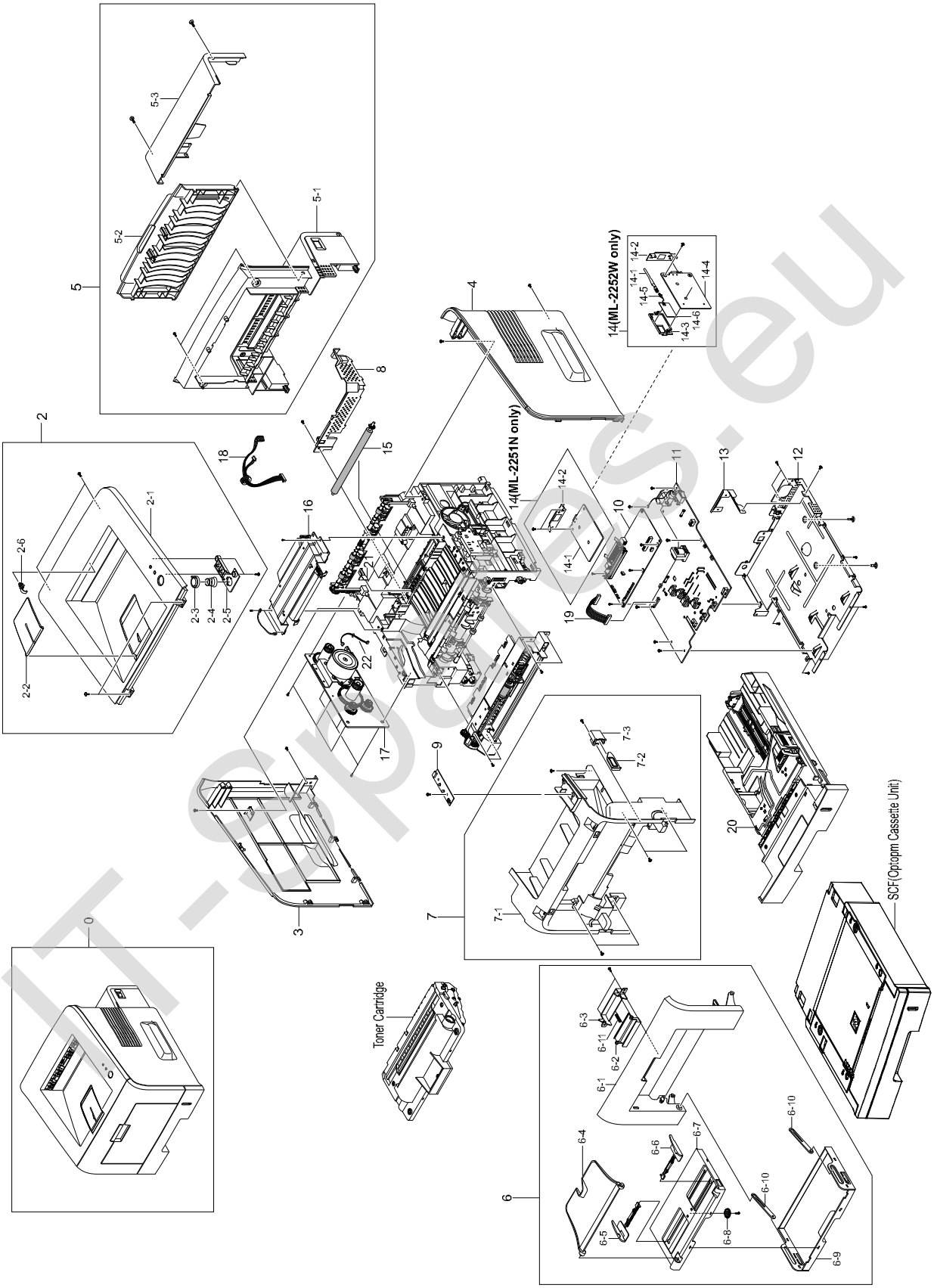

IT-spares.eu

8.2 Frame Unit Assembly

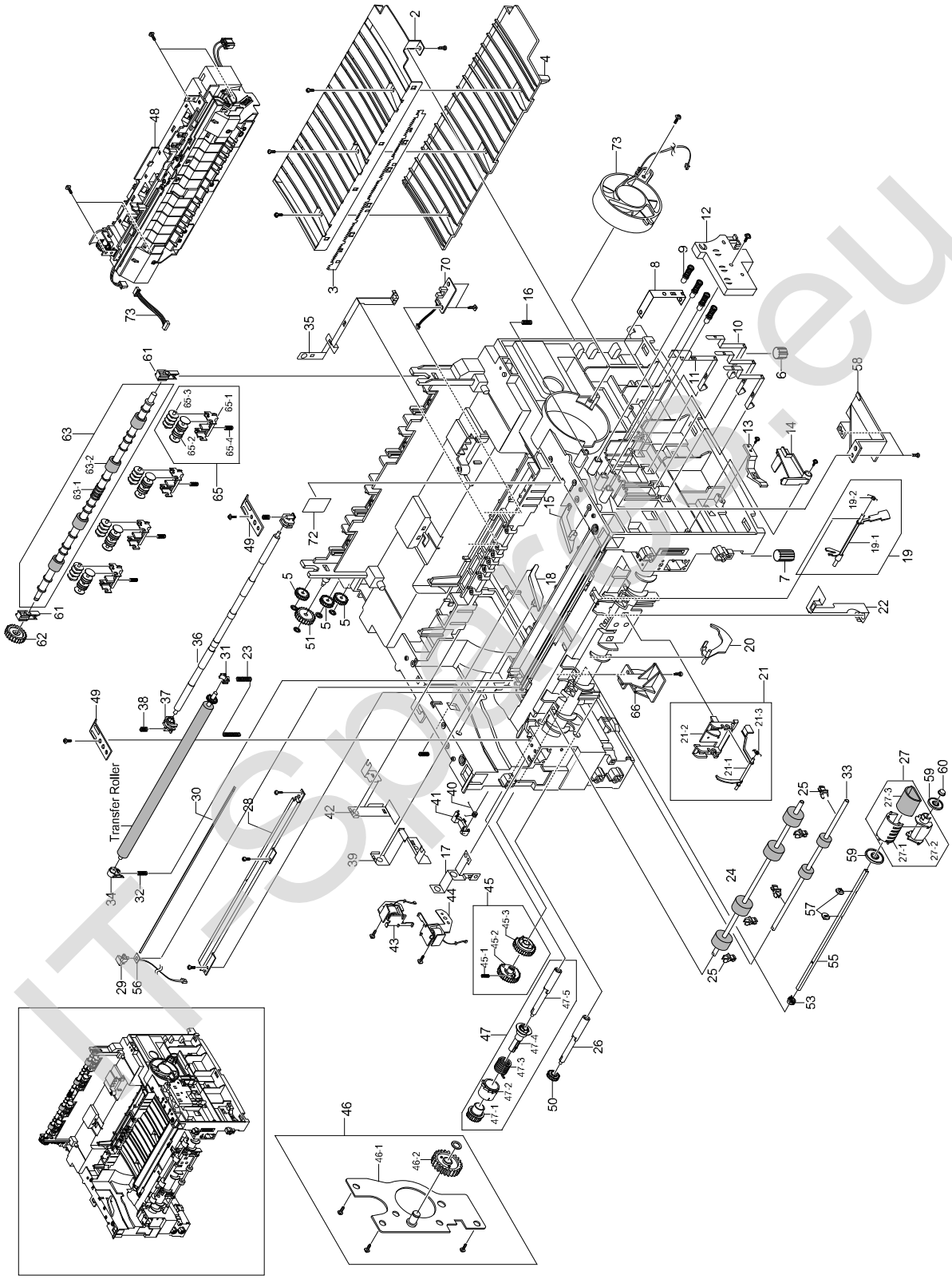

ITsparts.eu

8.3 MP Assembly

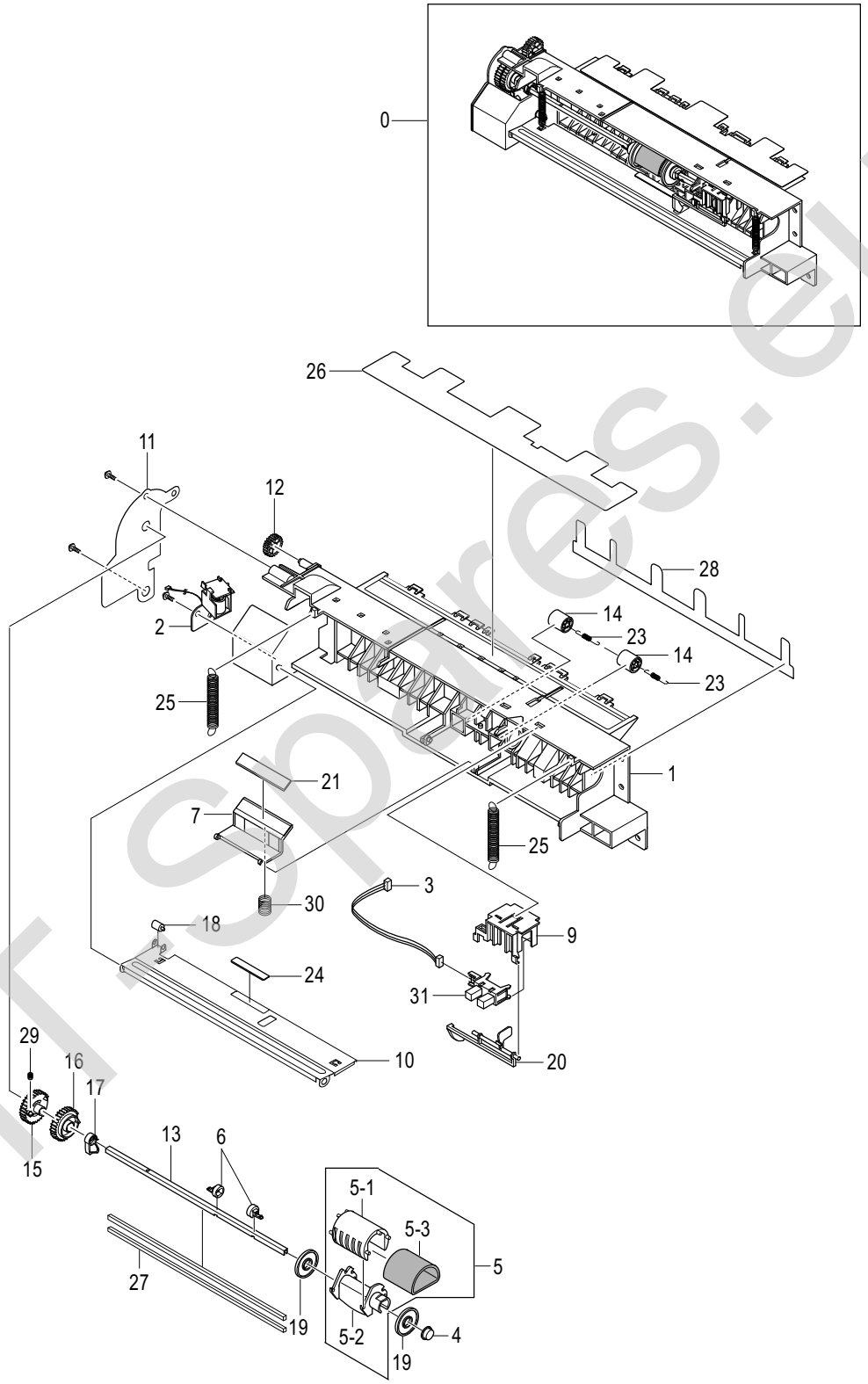

IT Spares.eu

8.4 Fuser Unit Assembly

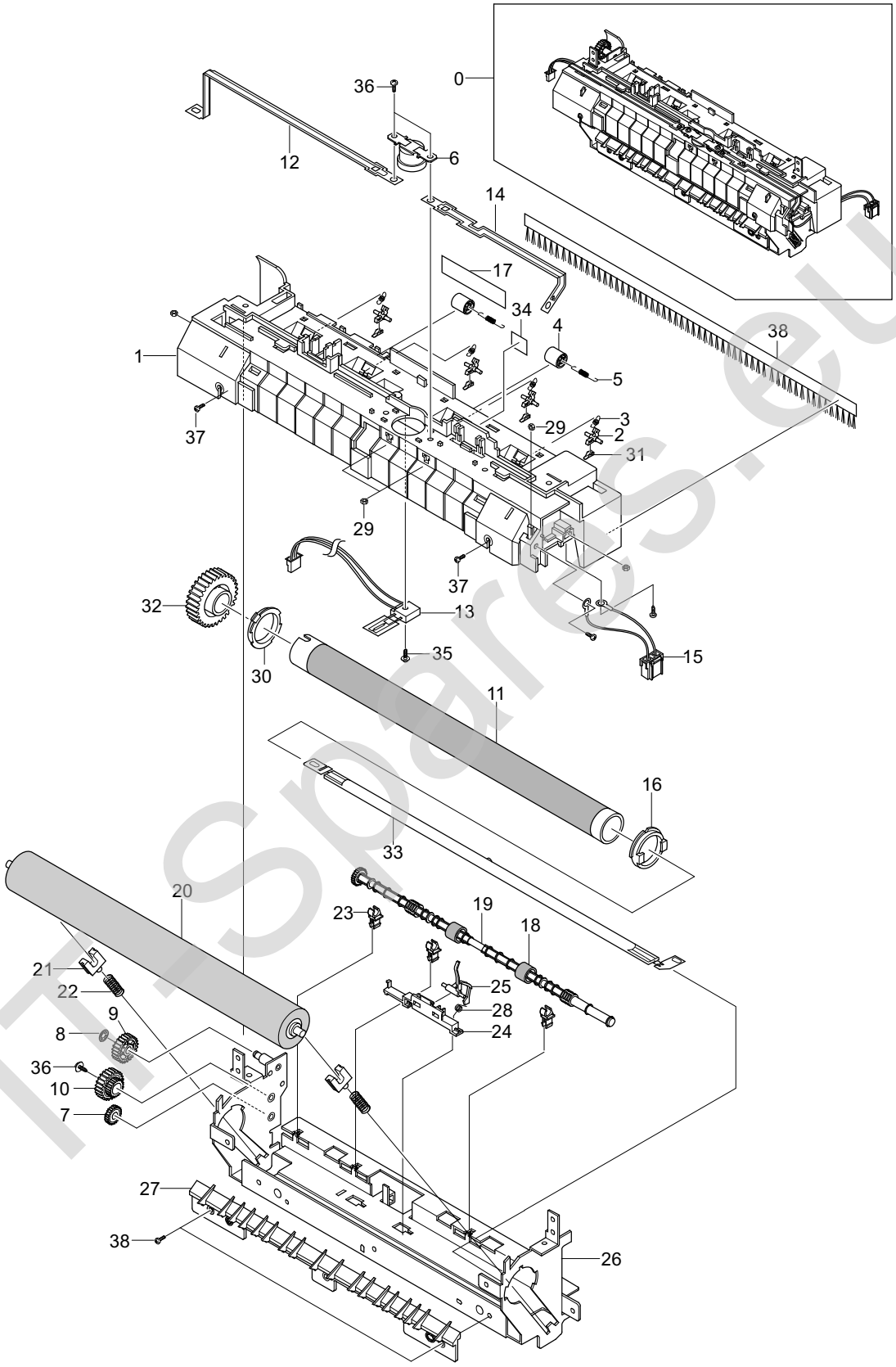

ITSpares.eu

8.5 RX Driver Unit Assembly

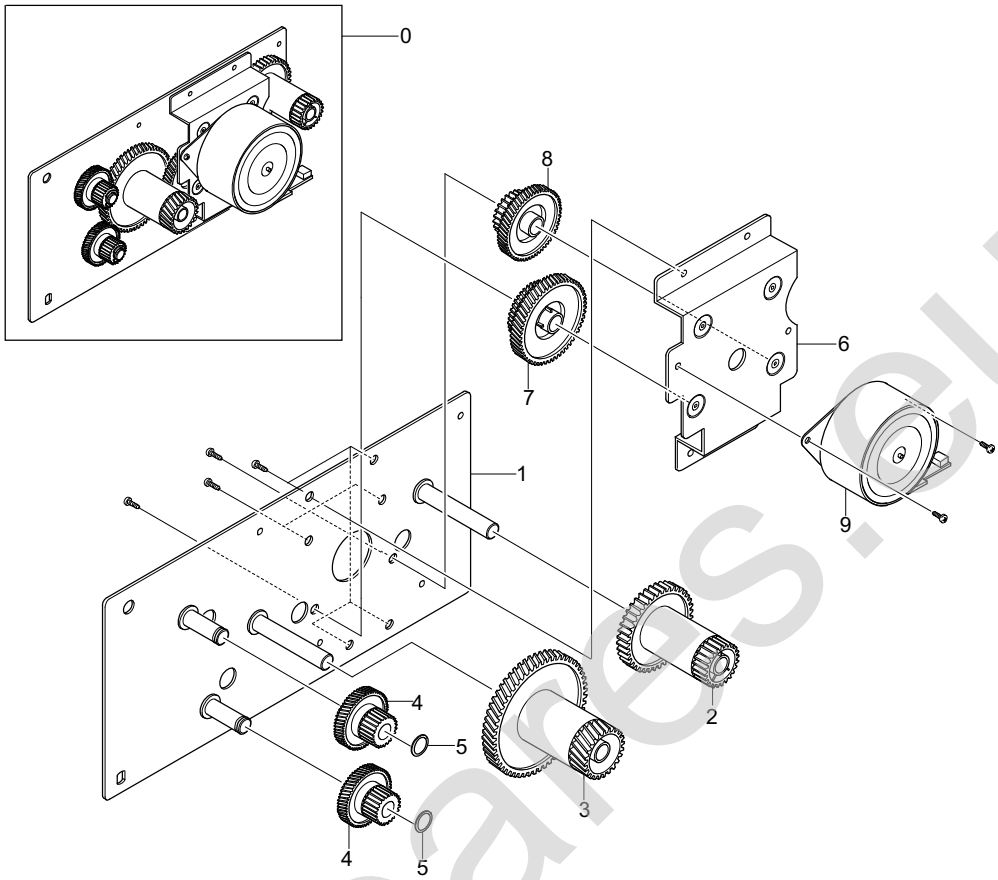

IT-Spares.eu

8.6 Cassette Unit Assembly

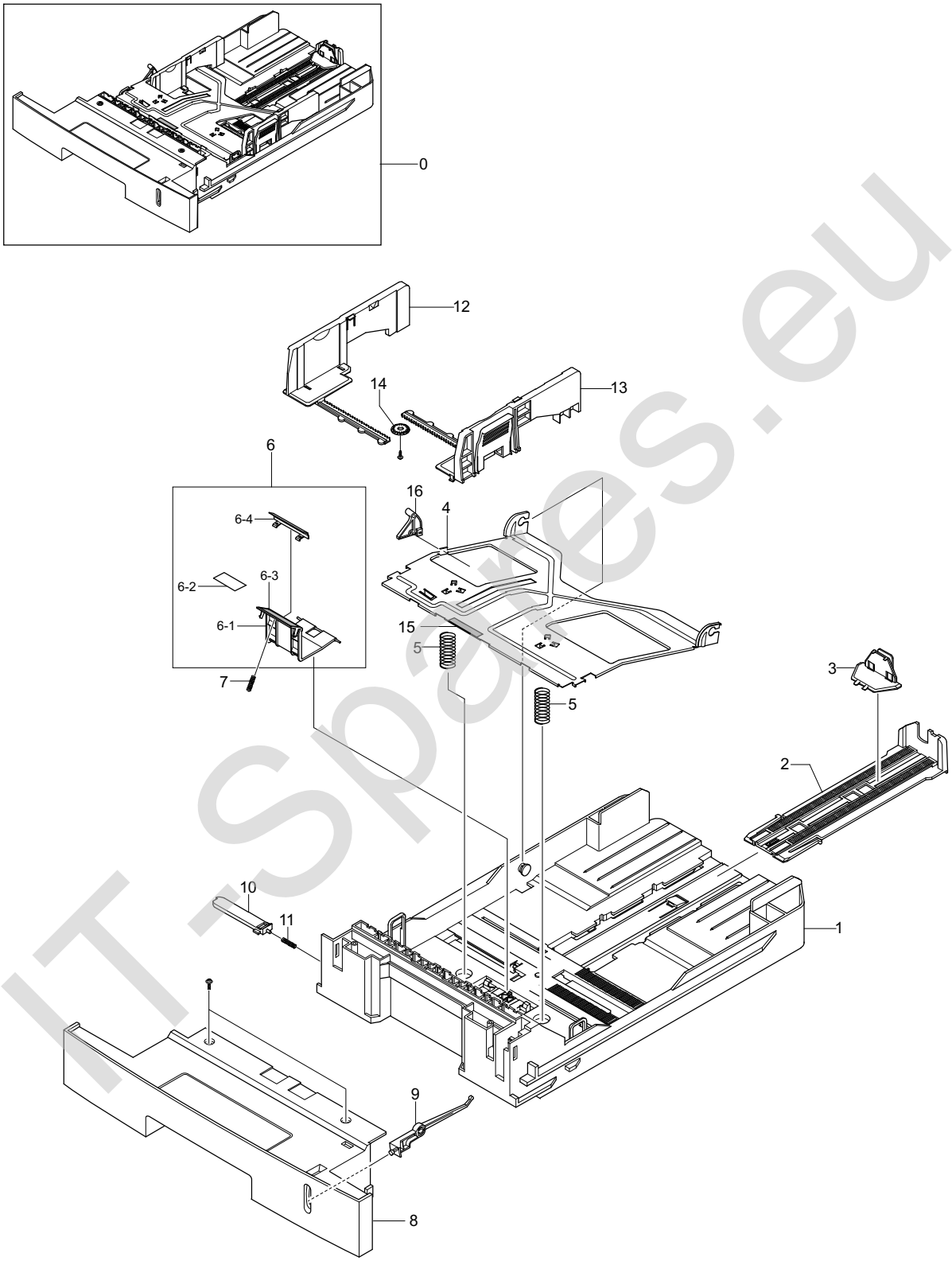

IT-Spares.eu

Parts List(Model code : ML-2251N/STS)

SA : Service Available, **SNA** : Service not Available

Draw#	Part Code	Description	Location	SNA
8-1. Main Assembly				
8.1-1	JC96-03129A	ELA HOU-FRAME_220V HB2;ML-2250,SEC,-,FRA		SA
8.1-2	JC97-02015A	MEA-COVER TOP H2N;ML-2251N,SEC,-,COVER T	Z2375	SA
8.1-2-1	JC63-00540A	COVER-M_TOP H2(N);ML-2251N,ABS,2.5,335.7	Z2235	SA
8.1-2-2	JC72-01325B	PMO-STACKER RX H2;ML-2250,ABS ,WHITE,-,-	Z5063	SA
8.1-2-3	JC64-00039A	KEY-M-ON LINE	K0045	SA
8.1-2-4	6107-001169	SPRING-CS		SA
8.1-2-5	JC67-00026A	LENS LED-M-LED;ML-1400,PMMA,CLEAR,-,-,-,	K3432	SA
8.1-2-6	JC61-00902A	BUSH-M-F/DOWN R2;SCX-4920,POM,-,-,-,BLK,	K2878	SA
8.1-3	JC63-00432A	COVER-M-SIDE L_H2;ML-2250,HIPS,2.5,348.2	Z2231	SA
8.1-4	JC63-00430A	COVER-M-SIDE R_H2;ML-2250,HIPS,2.5,348.2	Z2233	SA
8.1-5	JC97-01954A	MEA UNIT-COV REAR H2;ML-2250,SEC,-,COVER	Z2373	SA
8.1-5-1	JC63-00438A	COVER-M-REAR H2;ML-2250,ABS,2.5,318.5,26	Z2335	SA
8.1-5-2	JC63-00439A	COVER-M-FACE UP H2;ML-2250,ABS,2.5,279.2	Z2185	SA
8.1-5-3	JC63-00431A	COVER-M-REAR OPEN;ML-2250,HIPS,2.5,323,1	Z2268	SA
8.1-6	JC97-01950A	MEA UNIT-COVER FRONT;ML-2250,SEC,-,COVER	Z2262	SA
8.1-6-1	JC63-00433A	COVER-M-FRONT H2;ML-2250,ABS,2.5,357,181	D0014	SA
8.1-6-2	JC64-00148A	KNOB-M-LOCKER;ML-2250,HIPS,-,96,68,HB,-,		SNA
8.1-6-3	JC61-00936A	HOLDER-M-LOCKER;ML-2250,ABS,-,89.6,30.8,		SNA
8.1-6-4	JC63-00447A	TRAY-M-EXIT_MP	T4113	SA
8.1-6-5	JC70-00478A	ADJUST-M-MP L;ML-2250,ABS,-,133,67,-,-	K2018	SA
8.1-6-6	JC70-00479A	ADJUST-M-MP R;ML-2250,ABS,-,133,67,-,-	K2019	SA
8.1-6-7	JC63-00446A	TRAY-M-COVER_MP	T4133	SA
8.1-6-8	JG66-40003A	GEAR-PINION;SF4000,POM,WHT,M1,Z1		SA
8.1-6-9	JC63-00445A	TRAY-M-CASE_MP	T4107	SA
8.1-6-10	JC63-00444A	TRAY-M-LINK_MP;ML-2250,PC,2,74.6,9.3,-,-	T4137	SA
8.1-6-11	JG61-70549A	SPRING ETC-CIS(C2);SF4400,SUS304WPB,D11.	C5029	SA
8.1-7	JC97-01952A	MEA UNIT-COVER MID H2;ML-2250,SEC,-,COVE	P8003	SA
8.1-7-1	JC63-00436A	COVER-M-MIDDLE H2;ML-2250,HIPS,2.5,335.7	Z2199	SA
8.1-7-2	JC72-01339A	PMO-M-SUB ACTUATOR;ML-2250,POM,-,55.3*31	A0004	SNA
8.1-7-3	JC67-00068A	CAP-M-SUB ACTUATOR;ML-2250,HIPS,-,20,60,		SNA
8.1-8	JC63-00434A	COVER-M-SMPS REAR;ML-2250,HIPS,2.5,287.2	S7039	SA
8.1-9	JC92-01439A	PBA MAIN-PANEL;ML-1400,SEC,PANEL B`D,-,-	M0239	SA
8.1-10	JC92-01595J	PBA MAIN-CONTROLLER;ML-2251NRAB,220V,-,		SA
8.1-11	JC44-00069B	SMPS-V2 (CHINA);ML-2250,-,AC/DC,45.7W,22		SA
8.1-12	JC97-01966A	MEA UNIT-SHIELD;ML-2250,SEC,-,SHIELD ASS	E2098	SA
8.1-13	JC61-00601A	BRACKET-P-INLET;ML-1400,SECC,1,128,23,-,	B4027	SA
8.1-14	JC96-02699D	0LA HOU-NPC3_PRT;ML-2250,SEC,NPC,10/100B		SA
8.1-14-1	JC61-00809A	BRACKET-NPC;MLC-500,SECC,T0.8,-,-,-,-	H4009	SNA
8.1-14-2	JC92-01466A	PBA SUB-NPC3_PRT;ML-2151N,,,10	N3010	SA
8.1-15	JC97-01917A	MEA ETC-TR;SCX-4920N,DELL,-,TR ASS'Y,-,-	Z6247	SA
8.1-16	JC59-00018B	UNIT-LSU HUMMINGBIRD2;SCX-4920,-,-,600DP	L7044	SA
8.1-17	JC96-03078A	ELA UNIT-RX DRIVE;SCX-4920N,DELL,-,DRIVE	D4033	SA
8.1-18	JC39-00396A	CBF HARNESS-LSU	L7002	SA
8.1-19	JC39-00240B	CBF HARNESS-ENGINE	H1070	SA
8.1-20	JC97-01955A	MEA UNIT-CASSETTE HB2;ML-2250,SEC,-,CASS	K3548	SA
8.1-21	JC61-00606A	PLATE-P-CHANNEL;ML-1400,SECC,1,-,-,-,-	P5151	SA
8.1-22	JC39-00355A	CBF HARNESS-MOTOR	M2053	SA

ITmanuals.ru

SA : Service Available, **SNA** : Service not Available

Draw#	Part Code	Description	Location	SNA
8-2. Frame Assembly				
8.2-0	JC96-03129A	ELA HOU-FRAME_220V HB2;ML-2250,SEC,-,FRA		SA
8.2-1	JC61-00906A	FRAME-M-BASE R2;SCX-4920,ABS,-,V0,BLK,-,	B0081	SA
8.2-2	JC61-00607A	GUIDE-P-TR ;ML-1400,SECC,0.5,241,95,-,-	G2089	SA
8.2-3	JC61-00604B	PLATE-E_SAW;SF-755P,SUS304-CSP,0.15,16,2	P5152	SA
8.2-4	JC61-00594A	GUIDE-M-TR RIB;ML-1400,PC+ABS,-,-,-,BLK,	G2079	SA
8.2-5	JC72-00143A	PMO-GEAR_EXIT_DRV16;SF-5100,POM,		SNA
8.2-6	JC61-00835A	FOOT-BACK;ML-1750,NBR,D13.6,-,10.5,-,-	F1010	SA
8.2-7	JC61-00836A	FOOT-FRONT;ML-1750,NBR,D7,-,12,-,-	F1011	SA
8.2-8	JC63-00397A	GROUND-P-GUDIE TR R2;SCX-4920,SUS304,0.2		SNA
8.2-9	JC75-00049A	MEC-TERMINAL;SF-5100,SAMSUNG,IVR	K3739	SA
8.2-10	JC61-00903A	PLATE-P-TERMINAL CON R2;SCX-4920,SUS304,	K3385	SNA
8.2-11	JC61-00904A	PLATE-P-TERMINAL CR R2;SCX-4920,SUS304,0	P8153	SNA
8.2-12	JC61-00911A	HOUSING-M-TERMINAL R2;SCX-4920,ABS,-,58.	H6040	SA
8.2-13	JC72-00983A	PMO-LOCKER CST;ML-1400,POM,BLK,-,-,-,-,-	L6030	SA
8.2-14	JC72-00974A	PMO-ACTUATOR CVR OPEN;ML-1400,ABS,BLK,-,	O1073	SA
8.2-15	JC72-00985A	PMO-PLATE GUIDE DEVE_R;ML-1400,POM(M90-4	G2286	SA
8.2-16	JC61-70932A	SPRING ETC-GUIDE DEVE;ML-5000A,-,D4.5,-,	Z4188	SA
8.2-17	JC63-00401A	GROUND-P-PUSH BUSHING;SCX-4920,SUS304,0.	K3234	SNA
8.2-18	JC72-00984A	PMO-PLATE GUIDE DEVE_L;ML-1400,POM(M90-4	G2285	SA
8.2-19	JC97-01927A	MEA UNIT-ACT FEED;SCX-4920N,DELL,-,ACT F		SA
8.2-19-1	JC72-01323A	PMO-ACT FEED R2;SCX-4920,ABS,BLK,60*12*1	F6156	SNA
8.2-19-2	6107-001164	SPRING-TS		SA
8.2-20	JC72-00975A	PMO-ACTUATOR EMPTY;ML-1400,ABS,BLK,-,-,H	K3816	SA
8.2-21	JC97-01928A	MEA UNIT-ACT MANUAL;SCX-4920N,DELL,-,ACT		SA
8.2-21-1	JC72-01324A	PMO-ACT MANUAL R2;SCX-4920,ABS,BLK,50*20	K4129	SA
8.2-21-2	6107-001165	SPRING-TS		SNA
8.2-21-3	6107-001165	SPRING-TS		SNA
8.2-22	JC63-00395A	GROUND-P-EARTH TR R2;SCX-4920,SUS304,0.2	K3232	SNA
8.2-23	JC63-00403A	GROUND-P-TERMINAL TR;SCX-4920,SUS301,0.4	G2130	SA
8.2-24	JC66-00526A	ROLLER-FEED ROLLER 1;ML-1510,SUM24L+EPDM	F6201	SA
8.2-25	JC72-00382B	PMO-BUSHING FEED;ML-1710,DELRIN8903,WHIT	F6161	SA
8.2-26	JC66-00398A	SHAFT-FEED;ML-1400,POM+GF20%,-,-,-,-,-	F6210	SA
8.2-27	JC97-01926A	MEA UNIT-PICK UP;SCX-4920N,DELL,-,PICK U	P2092	SA
8.2-27-1	JC61-00909A	HOUSING-M-PICK UP_R2;SCX-4920,PC,-,20,30	M2077	SA
8.2-27-2	JC61-00910A	HOUSING-M-PICK UP2_R2;SCX-4920,PC,-,53,2	M2078	SA
8.2-27-3	JC72-01231A	SPONGE-ROLLER PICK_UP;ML-1510,URETHAN FO	P2164	SA
8.2-28	JC70-00307A	IPR-P-EARTH TRANSFER;ML-1400,SECC,-,1.0T	K3367	SA
8.2-29	JC61-00907A	HOLDER-M-PTL R2;SCX-4920,PC,2,15.8,15.3,	H4041	SA
8.2-30	JC67-00027A	LENS-PTL;ML-1400,PC,NTR,-,-,-,-	K3433	SA
8.2-31	JC72-00102A	PMO-BUSHING_TR(L);SF-5100,POM ,B	K3856	SA
8.2-32	JC61-00047A	SPRING ETC-TR L HAWK;ML-6060A,SUS 304 WP	Z4277	SA
8.2-33	JC66-00598A	ROLLER-FEED ;ML-1710,SUM24L+EPDN,3/14.5,	F6200	SA
8.2-34	JC61-00588A	BUSH-M-TR L;ML-1400,POM(M90-44),-,-,-,BL	K2886	SA
8.2-35	JC63-00396A	GROUND-P-FUSER R2;SCX-4920,SUS304,0.2,98		SNA
8.2-36	JC66-00527A	SHAFT-FEED IDLE;ML-1510,SUM24L,225,8,-,-	F6209	SA
8.2-37	JC61-00585A	BUSH-M-FEED IDLE;ML-1400,POM(M90-44),-,-	F6043	SA
8.2-38	JC61-70958A	SPRING ETC-TR	Z4041	SNA
8.2-39	JC63-00398A	GROUND-P-DRIVE2 R2;SCX-4920,SUS304,0.2,5		SNA
8.2-40	6107-001170	SPRING-TS		SA
8.2-41	JC66-00377A	CAM-M-PICK_UP;ML-1400,POM(M90-44),-,-,NT	P2042	SA

Free Manuals.eu

SA : Service Available, **SNA** : Service not Available

Draw#	Part Code	Description	Location	SNA
8.2-42	JC63-00394A	GROUND-P-DRIVE R2;SCX-4920,SUS304,0.2,48		SNA
8.2-43	JC33-00014A	SOLENOID-FEED ROCKY2;-,SCX-4920,DC24V,-,	P2162	SA
8.2-44	JC33-00010A	SOLENOID-HB (MANUAL);-,ML-1510,DC24V,-,-	S8015	SA
8.2-45	JC97-01929A	MEA UNIT-GEAR PICK UP;SCX-4920N,DELL,-,G	P2009	SA
8.2-45-1	JC66-00705A	GEAR-PICK UP B_R2;SCX-4920,PPS,0.8,33,-,		SA
8.2-45-2	JC66-00704A	GEAR-PICK UP A_R2;SCX-4920,PPS,0.8,33,-,		SA
8.2-45-3	6107-001167	SPRING-CS	D4089	SA
8.2-46	JC97-01925A	MEA UNIT-BRACKET FEED;SCX-4920N,DELL,-,B	F6040	SA
8.2-46-1	JC61-00913A	BRACKET-P-FEED R2;SCX-4920,SECC,1.0,80,5	F6041	SA
8.2-46-2	JC66-00690A	GEAR-35 IDLE;SF-755P,POM,0.8,35,-,IVORY,	G0147	SNA
8.2-47	JC97-01788A	MEA UNIT-CLUTCH;ML-1710,SAMSUNG,-,-,-,-,	C9040	SA
8.2-47-1	JC66-00393A	GEAR-FEED 1;ML-1400,POM(M90-44),-,-,-,NT	F6071	SA
8.2-47-2	JC72-00978A	PMO-COLLAR_SPRING;ML-1400,POM(M90-44),NT	Z4125	SA
8.2-47-3	6107-001171	SPRING-TS		SA
8.2-47-4	JC72-00981A	PMO-HUB CLUTCH;ML-1400,POM(M90-44),NTR,-		SNA
8.2-47-5	JC66-00398A	SHAFT-FEED;ML-1400,POM+GF20%,-,-,-,-,-	F6210	SA
8.2-48	JC96-03106B	ELA HOU-FUSER	F4006	SA
8.2-49	JC61-00914A	PLATE-P-PUSH BUSHING;SCX-4920,SUS304,0.8	K3234	SNA
8.2-50	JC66-00394A	GEAR-FEED 2;ML-1400,POM(M90-44),-,-,-,NT	F6072	SA
8.2-51	JC66-00396A	GEAR-IDLE 23;ML-1400,POM(M90-44),0.8,23,	G0256	SA
8.2-52	6107-001164	SPRING-TS		SA
8.2-53	JC61-00586A	BUSH-M-PICK_UP L	P2039	SA
8.2-55	JC66-00399A	SHAFT-P-PICK_UP;ML-1400,SECC,-,-,-,-,0.8	P2160	SA
8.2-56	JC92-01621A	PBA SUB-PTL	M0411	SA
8.2-57	JC61-00915A	STOPPER-M-PICK UP_R2;SCX-4920,POM(M90-44	K3752	SNA
8.2-58	JC61-00908A	HOLDER-M-TERMINAL R2;SCX-4920,ABS,-,60,4	H4037	SA
8.2-59	JC72-00982A	PMO-IDLE PICK_UP;ML-1400,POM(M90-44),NTR	P2131	SNA
8.2-60	JC61-00587A	BUSH-M-PICK_UP R;ML-1400,POM(M90-44),-,-	P2067	SA
8.2-61	JC61-00829A	HOLDER-BEARING EXIT F/DOWN;SCX-4216F,POM	H4009	SA
8.2-62	JC66-00038A	GEAR-EXIT F/DOWN;ML-4500,POM,WHT	E4039	SA
8.2-63	JC66-00378A	ROLLER-EXIT F/DOWN;ML-1400,PC(NH-1023),1	E4159	SA
8.2-64	JC73-40915A	RMO-RUBBER EXIT	E4155	SA
8.2-65	JC97-01034A	MEA RACK-EXIT ROLLER;ML-1605,SUMSUNG,KOR	E4060	SA
8.2-65-1	JC72-41006A	PMO-HOLDER EXIT ROLL;ML-165,PC,BLK,HB,-	E4126	SA
8.2-65-2	JC72-41007A	PMO-ROLLER FD F;ML-165,POM,BLK,HB,-	K4063	SA
8.2-65-3	JC72-41008A	PMO-ROLLER FD R;ML-165,POM,BLK,HB,-	K4064	SA
8.2-65-4	JC61-70911A	SPRING ETC-EXIT ROLL FD;ML-165,SUS304 WP	Z4137	SA
8.2-66	JC61-00917A	GUIDE-M-SUB FRONT;SCX-4920,HIPS,-,20,40,		SNA
8.2-70	JC92-01604A	PBA SUB-EXIT SENSOR	M0330	SA
8.2-72	JC68-00317A	LABEL(R)-HOT CAUTION,KME;ML-7050,TETRON,		SNA
8.2-73	JC31-00025A	FAN-DC;AD0624MSA70GL(R1)DOL,MLC-500,PBT+	F5016	SA
8-3. MP Assembly				
8.3-0	JC96-03132A	ELA UNIT-MP;ML-2250,SEC,-,MP,-,-,-	K3155	SA
8.3-1	JC61-00923A	FRAME-M-MP;ML-2250,ABS,-,-,-,2.5,79.5,31	F2243	SA
8.3-2	JC33-00015A	SOLENOID-MP;-,ML-2250,DC24V,-,-,-,-,300M	S8014	SA
8.3-3	JC39-00365A	CBF HARNESS-MPF SEN	H1168	SA
8.3-4	JC61-00587A	BUSH-M-PICK_UP R;ML-1400,POM(M90-44),-,-	P2067	SA
8.3-5	JC97-01926A	MEA UNIT-PICK UP;SCX-4920N,DELL,-,PICK U	P2092	SA
8.3-6	JC61-00915A	STOPPER-M-PICK UP_R2;SCX-4920,POM(M90-44	K3752	SNA
8.3-7	JC61-00924A	HOLDER-M-PAD_MP;ML-2250,PC+ABS,-,47,34,-	H4029	SA
8.3-9	JC61-00926A	HOLDER-M-SENSOR_MP;ML-2250,ABS,-,25,32.4	H4108	SA

ITSRepairs.eu

SA : Service Available, **SNA** : Service not Available

Draw#	Part Code	Description	Location	SNA
8.3-10	JC61-00927A	PLATE-P-KNOCK UP_MP;ML-2250,SECC,1.0,252		SNA
8.3-11	JC61-00932A	BRACKET-P-PICKUP_MP;ML-2250,SECC,1.0,70,	P2122	SA
8.3-12	JC66-00396A	GEAR-IDLE 23;ML-1400,POM(M90-44),0.8,23,	G0256	SA
8.3-13	JC66-00399A	SHAFT-P-PICK_UP;ML-1400,SECC,-,-,-,-,0.8	P2160	SA
8.3-14	JC66-00529A	ROLLER-M-IDLE FEED;ML-1510,POM,13,13,-,-	F6203	SA
8.3-15	JC66-00710A	GEAR-M-PICK UP_MP;ML-2250,POM,0.8,33,-,-	P2110	SA
8.3-16	JC66-00709A	GEAR-M-HOLDER_MP;ML-2250,POM,0.8,33,-,-,	H4073	SA
8.3-17	JC66-00711A	CAM-M-PICK UP MP;ML-2250,POM,-,28*24*17,	P2041	SA
8.3-18	JC72-00761A	PMO-ROLLER CAM.MP;SCX-5100,-,POM,WHT,-,-	K4061	SA
8.3-19	JC72-00982A	PMO-IDLE PICK_UP;ML-1400,POM(M90-44),NTR	P2131	SNA
8.3-20	JC72-01338A	PMO-M-ACT EMPTY MP;ML-2250,ABS,BLK,55.3*	K3119	SA
8.3-21	JC73-00140A	RPR-FRICTION PAD;ML-1510,NBB,1T 10*45,60	P0034	SA
8.3-23	JC61-70911A	SPRING ETC-EXIT ROLL FD;ML-165,SUS304 WP	Z4137	SA
8.3-24	JC73-00141A	RPR-PAD CASSETTE;ML-1510,NBB,1T 10*45,52		SNA
8.3-25	6107-001237	SPRING-ES		SNA
8.3-26	JC63-00545A	SHEET-GUIDE PAPER H2;ML-2250,PC,0.125T,2		SNA
8.3-27	JC66-00720A	SHAFT-P-CORE;ML-1750,SECC 1.6T,220,-,-,-	P2158	SNA
8.3-28	JC63-00448A	SHEET-GUIDE MP;ML-2250,PET,0.125,200,30,		SNA
8.3-29	6107-001167	SPRING-CS	D4089	SA
8.3-30	6107-001047	SPRING-ES;PI0.45,D2.75,L24.2,-,SUS304		SA
8.3-31	0604-001095	PHOTO-INTERRUPTER;TR,90%,150mW,DIP-4,BK	W3026	SA
8-4. Fuser Unit Assembly				
8.4-0	JC96-03106B	ELA HOU-FUSER	F4006	SA
8.4-1	JC63-00363A	COVER-M-FUSER R2;SCX-4920,PET+GF30%,68,5	Z2194	SA
8.4-2	JC61-00886A	HOLDER-M-PLATE CLAW R2;SCX-4920,PPS+GF40	H4031	SA
8.4-3	JC61-00064A	SPRING-CLAW;ML-5200A,SUS 304 WPB	B2031	SNA
8.4-4	JC72-40361A	PMO-ROLLER_EXIT;SCF(XR),POM,NTR,-,-	R0015	SNA
8.4-5	JC61-70976A	SPRING ETC-FUSER EXIT;-,SUS304WPB,D2.8,-	S0021	SNA
8.4-6	JC47-00005A	THERMOSTAT-150;ML-1510,-,125/250V,15/7.5	K4279	SA
8.4-7	JC72-00143A	PMO-GEAR_EXIT_DRV16;SF-5100,POM,		SNA
8.4-8	JC66-00396A	GEAR-IDLE 23;ML-1400,POM(M90-44),0.8,23,	G0256	SA
8.4-9	6044-000125	RING-E;ID4,OD9,T0.6,PASS,STSC	T2001	SA
8.4-10	JC66-00397A	GEAR-RDCN 25/15;ML-1400,POM(M90-44),-,25	G0386	SA
8.4-11	JC66-00729A	ROLLER-HEAT	K2232	SA
8.4-12	JC70-00473A	ELECTRODE-P-LFET R2;SCX-4920,-,-,-,-,-		SNA
8.4-13	1404-001298	HERMISTOR-NTC;7KOHM,-,3370K,0.3MW/C,-,-	W3071	SA
8.4-14	JC70-00472A	ELECTRODE-P-RIGHT R2;SCX-4920,-,-,-,-,-		SNA
8.4-15	JC39-00354A	CBF HARNESS-FUSER 220V	H1085	SA
8.4-16	JC61-00887A	BUSH-M-HR R_R2;SCX-4920,PPS(RBA313N),35,	K2880	SA
8.4-17	JC68-30928D	LABEL(P)-CAUTION, HOT_FUSER	L0035	SNA
8.4-18	JC73-00017A	RMO-RUBBER_EXIT;SF-5100,EPDM,11.	E4155	SA
8.4-19	JC66-00380A	ROLLER-M-EXIT F/UP;ML-1400,PC(NH-1023),1	E0041	SA
8.4-20	JC66-00600B	ROLLER-PRESSURE_CHINA	P6016	SA
8.4-21	JC66-10901A	BEARING-PRESSURE/R;ML-165,PPS,5,-,14.8	P6004	SA
8.4-22	6107-001168	SPRING-CS	D4085	SNA
8.4-23	JC72-00382A	PMO-BUSHING TX;ML-6060A,POM,BLK,-,-		SNA
8.4-24	JC61-00581A	HOLDER-ACTUATOR;ML-1400,PC(NH-1023),-,-,		SNA
8.4-25	JC72-01319A	PMO-ACTUATOR EXIT R2;SCX-4920,PC+GF20%,B	E4093	SA
8.4-26	JC61-00890A	FRAME-P-FUSER R2;SCX-4920,SECC,-,-,-,1.2	F2122	SA
8.4-27	JC61-00889A	GUIDE-M-INPUT R2;SCX-4920,PET+GF30%,16,1		SNA
8.4-28	6107-001165	SPRING-TS		SNA

ITPrares.eu

SA : Service Available, **SNA** : Service not Available

Draw#	Part Code	Description	Location	SNA
8.4-29	6021-000222	NUT-HEXAGON;2C,M3,ZPC(YEL),SM20C,-	M0006	SNA
8.4-30	JC61-00888A	BUSH-M-HR L_R2;SCX-4920,PPS(RBA313N),35,	K2879	SA
8.4-31	JC61-00605A	PLATE-P-CLAW;ML-1400,SUS304-CSP,0.1,-,-,	H4032	SNA
8.4-32	JC66-00695A	GEAR-FUSER R2;SCX-4920,PPS(OFL4036),0.8,	D4037	SA
8.4-33	4713-001183	LAMP-HALOGEN	K2297	SA
8.4-34	JC68-00407A	LABEL(R)-HV FUSER;ML-6060,PVC,-,220V,-	L0018	SNA
8.4-35	6003-000196	SCREW-TAPTITE;PWH,+,B,M3,L10,NI		SA
8.4-36	6006-001193	SCREW-ASSY MACH;WSP,PH,+,M3,10,ZPC(YEL),		SNA
8.4-37	6003-000269	SCREW-TAPTITE;BH,+,S,M3,L6,ZPC(Y		SA
8.4-38	JC75-00095A	MEC-BRUSH ANTISTATIC;ML-6060A,SEC,NTR	B5010	SA
8-5. RX Driver Unit Assembly				
8.5-0	JC96-03078A	ELA UNIT-RX DRIVE;SCX-4920N,DELL,-,DRIVE	D4033	SA
8.5-1	JC61-00891A	BRACKET-P-GEAR MAIN;SCX-4920,SECC,1.6,19	B4055	SA
8.5-2	JC66-00388A	GEAR-RDCN 53/26;ML-1400,POM(M90-44),-,53	G0393	SA
8.5-3	JC66-00706A	GEAR-RDCN 113/33;SCX-4920,POM,0.4/0.6,11	G0381	SA
8.5-4	JC66-00389A	GEAR-RDCN 57/18;ML-1400,POM(M90-44),-,57	G0394	SA
8.5-5	6031-000023	WASHER-PLAIN;-,ID5.9,OD10.0,T0.5		SNA
8.3-5-1	JC61-00909A	HOUSING-M-PICK UP_R2;SCX-4920,PC,-,20,30	M2077	SA
8.3-5-2	JC61-00910A	HOUSING-M-PICK UP2_R2;SCX-4920,PC,-,53,2	M2078	SA
8.3-5-3	JC72-01231A	SPONGE-ROLLER PICK_UP;ML-1510,URETHAN FO	P2164	SA
8.5-6	JC61-00916A	BRACKET-P-MOTOR MAIN R2;SCX-4920,SECC,1.	M2048	SA
8.5-7	JC66-00390A	GEAR-RDCN 103/41;ML-1400,POM(NW-02),-,10	G0396	SA
8.5-8	JC66-00392A	GEAR-RDCN 90/31;ML-1400,POM(M90-44),-,90	G0380	SA
8.5-9	JC31-00037A	MOTOR STEP-MAIN;M55SP-2NK,SCX-4920N,1.2A	M2159	SA
8-6. Cassette Unit Assembly				
8.6-0	JC97-01955A	MEA UNIT-CASSETTE HB2;ML-2250,SEC,-,CASS	K3548	SA
8.6-1	JC61-00876A	FRAME-M_CASSETTE;SF-755P,HIPS,HR-1360,HB		SNA
8.6-2	JC61-00918B	GUIDE-M-EXTENSION L2;ML-2250,HIPS,-,150,	E5013	SNA
8.6-3	JC72-00971A	PMO-EXTENSION SMALL;ML-1400,HIPS(HR-1360	E5014	SA
8.6-4	JC61-00603A	PLATE-P-KNOCK_UP;ML-1400,SECC,1,282,162,		SNA
8.6-5	6107-001166	SPRING-CS		SA
8.6-6	JC97-01931A	MEA UNIT-HOLDER PAD;SCX-4920N,DELL,-,HOL	P0014	SA
8.6-6-1	JC61-00580A	HOLDER-M-PAD;ML-1400,PC(NH-1023),-,-,-,-	P0034	SA
8.6-6-2	JC63-00407A	SHEET-HOLDER PAD R2;SCX-4920,PC,0.178T,5		SNA
8.6-6-3	JC73-00140A	RPR-FRICTION PAD;ML-1510,NBB,1T 10*45,60	P0034	SA
8.6-6-4	JC70-00314A	IPR-PLATE PAD;ML-1400,SUS304-CSP,-,0.1,-	P0009	SA
8.6-7	JC61-70911A	SPRING ETC-EXIT ROLL FD;ML-165,SUS304 WP	Z4137	SA
8.6-8	JC63-00441A	COVER-M-SUB CASSETTE H2;ML-2250,HIPS,2.5		SA
8.6-9	JC64-00143A	INDICATOR-M-CST PAPER;ML-2250,HIPS(HR-13	S4102	SNA
8.6-10	JC72-00972A	PMO-PLATE_LOCKER;ML-1400,POM(M90-44),WHT	L6051	SA
8.6-11	JG61-70531A	SPRING ETC-LOCKER,PLATE	Z4215	SA
8.6-12	JC70-00300A	ADJUST-M-CASSETTE_L;ML-1400,ABS,-,-,-,BL	K2014	SA
8.6-13	JC70-00301A	ADJUST-M-CASSETTE_R;ML-1400,ABS,-,-,-,BL	K2015	SA
8.6-14	JG66-40003A	GEAR-PINION;SF4000,POM,WHT,M1,Z1		SA
8.6-15	JC73-00141A	RPR-PAD CASSETTE;ML-1510,NBB,1T 10*45,52		SNA
8.6-16	JC66-00719A	CAM-M-KNOCK UP;ML-1750,POM(M90-44),-,-,N		SNA
	JC96-03151C	ELA HOU-DEVE HB2;ML-2250/SEE,SEC,-,CARTR		SNA
	JC02-00022A	TONER-ROCKY2;SCX-4920N,-,-,8.5UM,-,-,-		SNA
	JC61-00922A	FRAME-M-DEV UPPER SEC;ML-2250,HIPS,-,HB,		SNA
	JC66-00701A	DRUM-OPC R2		SNA
	JC68-10914D	LABEL(P)-SERIAL NO;ML-85,ART,70X		SNA

ITSPARTS.COM

SA : Service Available, **SNA** : Service not Available

Draw#	Part Code	Description	Location	SNA
	JC97-01918A	MEA ETC-DEVE;SCX-4920N,DELL,-,-,-,-,-		SNA
	0105-001032	PAPER-ART;75g,W210,-,WHITE,HANSO		SNA
	0201-001162	ADHESIVE-CYA;LOCTITE403,NTR,1250		SNA
	0201-001183	ADHESIVE-AA;ARON ALPHA #202F,NTR,100,20G		SNA
	0203-001189	TAPE-ACETATE;#810,T0.05,W12,L65000,NTR		SNA
	0205-001059	GREASE-BEARING;PETAMO GHV 133,BE		SNA
	0205-001067	GREASE-GRAPHITE;NYOGEL 756G,HYDR		SNA
	0205-001088	GREASE-BEARING;HANARL FL-955,NOISE DAMPI		SNA
	6003-000119	SCREW-TAPTITE		SA
	6031-000022	WASHER-PLAIN		SNA
	6031-000023	WASHER-PLAIN;-,ID5.9,OD10.0,T0.5		SNA
	6031-001051	WASHER-PLAIN;M4,ID4.1,OD7.0,T0.1	S2004	SNA
	6902-000332	BAG CONDUCTIVE;PE+CARBON,T0.1,W250,L500,		SNA
	JC61-00897A	FRAME-M-DEV LOWER R2;SCX-4920,ABS,-,HB,B		SNA
	JC62-00086A	SEAL-SIDE CAP;ML-1510,EPDM,-,-,-,-,HARDN		SNA
	JC62-00134A	SEAL-SUPPLY L_R2;SCX-4920,PORON,-,5,30.7		SNA
	JC62-00135A	SEAL-SUPPLY R_R2;SCX-4920,PORON,-,5,30.7		SNA
	JC62-00136A	SEAL-SIDE R2		SNA
	JC62-00137A	SEAL-FRAME LOWER R2		SNA
	JC62-00138A	SEAL-BLADE R2		SNA
	JC62-00139A	SEAL-SUS BLADE R2		SNA
	JC63-00381A	SHEET-FILM REAR		SNA
	JC66-00381A	GEAR-AGITATOR;ML-1400,POM,0.6,22,-,-,-,-		SA
	JC66-00384A	GEAR-DEVE ROLLER;ML-1400,DELIN 500CL,0.8		SA
	JC66-00386A	GEAR-OPC L;ML-1400,POM,0.6,30,6.3 / 10,-		SA
	JC66-00696A	GEAR-IDLE 28/17;SCX-4920,POM,0.6,28/17,W		SNA
	JC66-00697A	GEAR-IDLE 17/20;SCX-4920,POM,0.8/0.6,17/		SNA
	JC66-00698A	GEAR-SUPPLY ROLLER;SCX-4920,500CL,0.61,1		SNA
	JC66-00699A	GEAR-IDLE 39/19;SCX-4920,POM,0.6/0.5,39/		SNA
	JC66-00700A	ROLLER-SUPPLY R2;SCX-4920,SUM24L+SILICON		SA
	JC66-00707A	ROLLER-DEVE R2;SCX-4920,SILICON FORM,11.		SNA
	JC66-40930A	GEAR-AGITATOR		SNA
	JC67-00028A	CAP-M-DEV L;ML-1400,ABS,2,-,-,-,19*27*2.		SNA
	JC67-00029A	CAP-M-DEV R;ML-1400,ABS,2,-,-,-,19*27*2.		SNA
	JC68-00274A	LABEL(R)-RIBBON;SF-5100,100,-,-,		SNA
	JC70-40910A	ICT-SHAFT GEAR;MLE-5000,SUM24L,-,-		SNA
	JC72-00082A	PMO-BUSHING AGI R;SF-5100,POM,WH		SNA
	JC72-00288A	PPR-SPACER DR;SF-5100,PET FILM,		SNA
	JC72-00288B	PPR-SPACER DR R		SNA
	JC72-40232A	PMO-CAP AGITATOR;ML-80,PP,BLK,-,		SNA
	JC72-41051A	PMO-BUSHING RIGHT;ML-6000,POM(M90-44),BL		SNA
	JC73-00055A	RPR-SEAL SPACE		SNA
	JC73-10914A	RPR-SEAL FILM;MLE-5000,URETHANE		SNA
	JC75-00043A	MEC-GEAR OPC R;SF-5100,SEC,POM+C		SNA
	JC66-00012A	GEAR-OPC R;SF-5100,POM(M90-44),B		SNA
	JC71-00002A	NPR-EARTH OPC APOLLO;SF-5100,C52		SNA
	JC75-00044A	MEC-BUSHING AGI L;SF-5100,SEC,PO		SNA
	JC72-00081A	PMO-BUSHING AGI L;SF-5100,POM,WH		SNA
	JC73-40906A	RMO-SEAL AGITATOR;MLE-5000,SANTO		SNA
	JC97-01920A	MEA-CHARGE ROLLER;SCX-4920N,DELL,-,CHARG		SNA
	6031-000023	WASHER-PLAIN;-,ID5.9,OD10.0,T0.5		SNA
	JC66-00018A	GEAR-CHARGE ROLLER;SF-5100,POM(M		SNA

ITexpres.eu

SA : Service Available, **SNA** : Service not Available

Draw#	Part Code	Description	Location	SNA
	JC66-00702A	ROLLER-CHARGE R2;SCX-4920,NBR+SBR,12,241		SNA
	JC97-01921A	MEA-SUS BLADE;SCX-4920N,DELL,-,SUS BLADE		SNA
	JC61-00900A	BRACKET-BLADE R2;SCX-4920,SECC,1.2,6,269		SNA
	JC61-00901A	BLADE-SUS R2;SCX-4920,SUS301-CSP,-,W15.9		SNA
	JC97-01922A	MEA-PLATE DEVE L;SCX-4920N,DELL,-,PLATE		SNA
	JC61-00025A	SPRING ETC-CS-CHARGE APOLLO	B2030	SNA
	JC61-00898A	PLATE-M-DEVE L_R2;SCX-4920,PC,2.5,130,42		SNA
	JC72-40332A	PMO-BUSHING_CHARGE;ML-80,POM,BLK		SNA
	JC72-41105A	PMO-BUSHING DEV;MLE-5000,POM,NTR,-,-		SNA
	JC97-01923A	MEA-PLATE DEVE R;SCX-4920N,DELL,-,PLATE		SNA
	JC61-00025A	SPRING ETC-CS-CHARGE APOLLO	B2030	SNA
	JC61-00899A	PLATE-M-DEVE R_R2;SCX-4920,ABS,2,130,42,		SNA
	JC70-00153A	IPR-ELECTRODE CHARGE;ML-4500,SUS		SNA
	JC70-00305A	ELECTRODE-P-SR;ML-1400,-,-,-,-,-		SNA
	JC70-50901A	IPM-BUSHING DEV R;MLE-5000,BRONZ		SNA
	JC72-00083A	PMO-HOLDER CR		SNA
	JC72-41105A	PMO-BUSHING DEV;MLE-5000,POM,NTR,-,-		SNA
	JC97-01945A	MEA-AGITATOR;SCX-4920N,DELL,-,AGITATOR,-		SNA
	JC63-00382A	SHEET-FILM AGITATOR;SCX-4920,PET,0.1,14,		SNA
	JC72-01321A	PMO-AGITATOR 1;SCX-4920,ABS,BLK,D7*215,-		SNA
	JC72-10925A	PPR-FILM SUPPORT AGI;MLE-5000,PE		SNA
	JC97-01946A	MEA-AGITATOR 2;SCX-4920N,DELL,-,AGITATOR		SNA
	JC63-00383A	SHEET-FILM AGITATOR2;SCX-4920,PET,0.1,13		SNA
	JC72-01322A	PMO-AGITATOR 2;SCX-4920,ABS,BLK,216*5*32		SNA
	JC97-01956A	MEA UNIT-CLEAN FELT;SCX-4920N,DELL,-,CLE		SNA
	JC61-00596A	BRACKET-P-CLEAN;ML-1400,SECC,1.2,259,9,-		SNA
	JC72-01342A	SHEET ABS-FILM_OPC R2;SCX-4920N,URETHANE		SNA
	JC74-00008A	MCT-FUR FOAM CR APO;SF-5100,FUR,		SNA
	JC97-02001B	MEA-PROTECTION CARD;ML-2250,SEC,-,PROTEC		SNA
	JC62-00143A	SEAL-PROTECTION CARD;SCX-4920,POLYURETHA		SNA
	JC68-01296B	MANUAL-DEVE_SHEET;ML-2250,SEC,-,-,ART,24		SNA
	JC96-03167A	ELA HOU-ENGINE H2(N);ML-2251N,SEC,-,ENGI		SNA
	6001-000568	SCREW-MACHINE;PH,+,M3,L8,NI PLT,		SA
	6003-000119	SCREW-TAPTITE		SA
	6003-000196	SCREW-TAPTITE;PWH,+,B,M3,L10,NI		SA
	6003-000264	SCREW-TAPTITE		SNA
	6003-000266	SCREW-TAPTITE		SNA
	6003-000301	SCREW-TAPTITE;BH,+,S,M4,L6,ZPC(YEL),SWRC		SNA
	6009-001463	SCREW-SPECIAL		SNA
	JC39-00348A	CBF HARNESS-OPE;SCX-4920N,CBF,UL1061,5PI		SA
	JC39-00375A	CBF HARNESS-LSU GND		SA
	0601-000003	LED;ROUND,RED/GRN,3.1mm,650/563nm		SA
	0601-000142	LED;ROUND,Y-GRN,3.0mm,570nm		SNA
	3404-000165	SWITCH-TACT;12V,50mA,160gf,6x6mm,SPST		SA
	3711-000988	CONNECTOR-HEADER		SA
	JC41-00170A	PCB-PANEL (1LAYER)		SNA
	JC66-00395A	GEAR-TRANSFER;ML-1400,POM(M90-44),-,-,-,	G0448	SA
	JC66-00703A	ROLLER-TRANSFER R2;SCX-4920,SUM24L+NBR,1	T3013	SA
	6103-001056	SUPPORTER;DASC-8N,L11,NATUAL,NYLON 6/6		SNA
	JC63-00443A	SHIELD-P-ENGINE H2;ML-2250,SECC,0.8,344,		SNA
	JC96-03176A	ELA HOU-COVER H2N;ML-2251N,SEC,-,COVER A		SNA
	6003-000196	SCREW-TAPTITE;PWH,+,B,M3,L10,NI		SA

SA : Service Available, **SNA** : Service not Available

Draw#	Part Code	Description	Location	SNA
	6003-000264	SCREW-TAPTITE		SNA
	6003-000196	SCREW-TAPTITE;PWH,+,B,M3,L10,NI		SA
	0203-000007	TAPE-FILAMENT;3M,T0.15,W18,L55M,		SNA
	6003-000264	SCREW-TAPTITE		SNA
	6003-000196	SCREW-TAPTITE;PWH,+,B,M3,L10,NI		SA
	6003-000261	SCREW-TAPTITE		SNA
	6003-000264	SCREW-TAPTITE		SNA
	JC99-01755A	PAA-PACKING_HB2;ML-2250,SEC,-,PACKING,HB		SNA
	0203-001100	TAPE-OPP MASKING;OPP/W75/CLR,T0.		SNA
	6902-000312	BAG PE;HDPE,T0.02,W1000,L900,TRP,8,4-		SNA
	6902-000379	BAG AIR;HDPE,T0.2,L1800,W1000,TRP,,,PAPE		SNA
	JC69-00628A	CUSHION-EPS R/L(XRX);ML-2250/XRX,EPS,-,1		SNA
	JC99-01756C	PAA-LABEL;ML-2250/SEE,SEC,-,LABEL ASS'Y,		SNA
	JB68-00916A	LABEL RATING-BLANK;SF-340,SEC,MAT,0.025,		SNA
	JB75-10029A	MEC-RIBBON		SNA
	JC68-10932B	LABEL(P)-BLANK(YELLOW);ML-1710,-,ART,100		SNA
	JC99-01766T	INA-ACESSORY_STS		SNA
	3903-000042	CBF-POWER CORD;DT,EU,FP3/YES,IEC320 C13	K2903	SA
	6902-000288	BAG PE;LDPE,T0.05,W250,L450,TRP,8,2-		SNA
	JC46-00076D	S/W APPLICATION-SYNC;-,CLP-510,PRT DRV,1		SNA
	JC46-00213A	S/W APPLICATION-DRV;-,ML-2250,LBP DRV,1.		SNA
	JC68-00823A	MANUAL-QUICK GUIDE MANUAL;ML-7300N,SEC,K		SNA
	JC68-01032A	MANUAL-REGISTRATION CARD;ML-1210,XGE,ARA		SNA
	JC68-01245A	MANUAL-GUARANTEE_SHEET;ML-1750,XSG,ARABI		SNA
	JF68-10532B	LABEL(P)-BAR CODE		SNA
	JC99-01775A	PAA WOOD-MATERIAL;ML-2250,SEC,-,MATERIAL		SNA
	0105-000107	PAPER-ART;-,W210,-,-,3M,L297		SNA
	0203-000007	TAPE-FILAMENT;3M,T0.15,W18,L55M,		SNA
	0205-001056	GREASE-GRAPHITE;CRS841,WHT,-		SNA
	JC69-00050A	BAG ENVELOPE		SNA
	JF68-10532B	LABEL(P)-BAR CODE		SNA
	0105-001032	PAPER-ART;75g,W210,-,WHITE,HANSO		SNA
	JC68-01346C	MANUAL-QRG_7;ML-2250,TURKEY,7 LANGUAGES,		SNA
	JC69-00569G	BOX(P)-MAIN_HB2;ML-2251N/SEE,SW, A,A1,45		SNA
	0105-001032	PAPER-ART;75g,W210,-,WHITE,HANSO		SNA
	0202-000008	SOLDER-WIRE;HI-FLO,3.0,-,D3.0,63SN/37PB,		SNA
	0202-000118	SOLDER-WIRE;KR-19 RMA,-,D0.8,-,-		SNA
	0202-001025	SOLDER-WIRE FLUX;KS-611,-,-,-,spray		SNA
	0204-000469	THINNER;#4662,-,0.795,-		SNA
	0402-000129	DIODE-RECTIFIER;1N4003,200V,1A,D		SA
	2001-000935	R-CARBON;68OHM,5%,1/4W,AA,TP,2.4X6.4MM		SA
	2005-000168	R-WIRE WOUND,NON;0.22ohm,5%,2W,AA,BK,4x1		SNA
	2801-003582	CRYSTAL-UNIT		SA
	2801-003886	CRYSTAL-UNIT;12MHz,50ppm,28-AAA,16pF,50o		SNA
	2801-004241	CRYSTAL-UNIT;19.61374MHZ,20PPM,-,18PF,25		SNA
	3702-000118	CONNECTOR-RIBBON;36P,FEMALE,ANGL		SNA
	3702-001121	CONNECTOR-RIBBON;60P,MALE,STRAIGHT,AUF		SA
	3709-001131	CONNECTOR-CARD EDGE;100P,1.27MM,STRAIGHT		SNA
	3711-000015	CONNECTOR-HEADER		SA
	3711-002003	CONNECTOR-HEADER;BOX,26P,2R,2mm,		SNA
	3711-002812	CONNECTOR-HEADER;BOX,11P,1R,2mm,STRAIGHT		SNA
	3711-003408	CONNECTOR-HEADER;BOX,2P,1R,2mm,STRAIGHT,		SNA

ITSPARTS.eu

SA : Service Available, **SNA** : Service not Available

Draw#	Part Code	Description	Location	SNA
	3711-003409	CONNECTOR-HEADER;BOX,3P,1R,2mm,STRAIGHT,		SNA
	3711-003410	CONNECTOR-HEADER;BOX,4P,1R,2mm,STRAIGHT,		SNA
	3711-003942	CONNECTOR-HEADER;BOX,2P,1R,2mm,STRAIGHT,		SA
	3711-003969	CONNECTOR-HEADER;BOX,2P,1R,2.5mm,STRAIGH		SNA
	3711-004349	CONNECTOR-HEADER;BOX,3P,1R,2MM,STRAIGHT,		SA
	3711-004379	CONNECTOR-HEADER;BOX,4P,1R,2MM,STRAIGHT,		SA
	3722-000124	JACK-DIN		SNA
	3722-001101	JACK-USB		SNA
	JB68-00072A	LABEL(R)-BAR RIBON;SF-3000,PY,80X91000,T		SNA
	JB68-00073A	LABEL(R)-BAR CODE;SF-3000,PY,38X		SNA
	JC68-00573A	LABEL(R)-BARCODE;ML-4500,PET,T0.		SNA
	JC94-00804A	PHANTOM AU JC92-01595K		SNA
	0201-001235	ADHESIVE-TS;DEH-390D,RED,400,-		SNA
	0202-000108	SOLDER-CREAM;RMA-20-21L,-,20~38 ##,62.8S		SNA
	0203-001235	TAPE-PAPER;YW-692,T0.15,W5.8,L4000M,-		SNA
	0203-001236	TAPE-PAPER;YW-4620,T0.12,W6.2,L4000M,-		SNA
	0401-000116	DIODE-SWITCHING;MMSD914T1,100V,200mA,SOD		SNA
	0401-000122	DIODE-SWITCHING		SA
	0404-000112	DIODE-SCHOTTKY;RB420D,25V,100mA,		SA
	0407-000101	DIODE-ARRAY;DA204K,20V,100MA		SA
	0501-000150	TR-SMALL SIGNAL;2SA1037,PNP,200mW,SOT-23		SA
	0501-000279	TR-SMALL SIGNAL;KSA1182-Y,PNP,150mW,SOT-		SA
	0501-000338	TR-SMALL SIGNAL		SNA
	0501-000457	TR-SMALL SIGNAL;MMBT2222A,NPN,22		SA
	0504-000111	TR-DIGITAL;DTC114YK,NPN,200MW,10K/47K,SO		SA
	0801-000794	IC-CMOS LOGIC;7S08,AND GATE,SOT-25,5P,63		SA
	0801-002095	IC-CMOS LOGIC;74LCX245,BUFFERS,TSSOP,20P		SNA
	0801-002143	IC-CMOS LOGIC;7S32,OR GATE,SOT-2		SA
	0801-002446	IC-CMOS LOGIC;74LCX14,SCHMITT INVERTER,T		SNA
	0801-002591	IC-CMOS LOGIC;74LVX273,D FLIP-FLOP,TSSOP		SA
	0904-001752	IC-USC;NET2270,16BIT,TQFP,64P,10X10MM,30		SNA
	1003-001535	IC-MOTOR DRIVER;A3977SLP,TSSOP,28P,9.6X4		SNA
	1006-001224	IC-LINE TRANSCEIVER;74LVX161284,TSSOP,48		SA
	1103-001228	IC-EEPROM		SA
	1105-001464	SDRAM		SA
	1107-001286	IC-FLASH MEMORY;29LV160,2Mx8Bit,TSOP,48P		SNA
	1202-000164	IC-VOLTAGE COMP.;393,SOP,8P,150MIL,DUAL,		SA
	1203-001455	IC-POSI.FIXED REG.;1117,DPAK,3P,		SA
	1203-002220	IC-POSI.ADJUST REG.;LD1117,DPAK,3P,240MI		SA
	1203-002233	IC-RESET;XC61F,SOT-23,3P,-,PLASTIC,0.7/1		SNA
	1205-002258	IC-CLOCK GENERATOR;CY25814SC,SOIC,8P,150		SNA
	1205-002339	IC-CLOCK GENERATOR;CY25811SC,SOIC,8P,150		SA
	2007-000067	R-CHIP;15Kohm,1%,1/16W,DA,TP,1608		SA
	2007-000070	R-CHIP;0ohm,5%,1/10W,TP,1608		SA
	2007-000071	R-CHIP;22ohm,5%,1/16W,DA,TP,1608		SA
	2007-000074	R-CHIP;100ohm,5%,1/16W,DA,TP,160		SA
	2007-000076	R-CHIP;330ohm,5%,1/16W,DA,TP,1608		SA
	2007-000078	R-CHIP		SA
	2007-000082	R-CHIP;3.3Kohm,5%,1/16W,DA,TP,1608		SA
	2007-000084	R-CHIP;4.7Kohm,5%,1/16W,DA,TP,16		SA
	2007-000086	R-CHIP;5.6Kohm,5%,1/16W,DA,TP,16		SA
	2007-000090	R-CHIP		SA

ITSELECTRONICS.eu

SA : Service Available, **SNA** : Service not Available

Draw#	Part Code	Description	Location	SNA
	2007-000091	R-CHIP		SA
	2007-000094	R-CHIP;22Kohm,5%,1/16W,DA,TP,160		SA
	2007-000096	R-CHIP;30Kohm,5%,1/16W,DA,TP,1608		SA
	2007-000097	R-CHIP;47Kohm,5%,1/16W,DA,TP,160		SA
	2007-000106	R-CHIP;220Kohm,5%,1/16W,DA,TP,16		SA
	2007-000113	R-CHIP;33ohm,5%,1/16W,DA,TP,1608		SA
	2007-000116	R-CHIP;120ohm,5%,1/16W,DA,TP,1608		SA
	2007-000123	R-CHIP;1.5Kohm,5%,1/16W,DA,TP,16		SA
	2007-000134	R-CHIP;33Kohm,5%,1/16W,DA,TP,160		SA
	2007-000403	R-CHIP:150OHM,5%,1/8W,DA,		SA
	2007-000472	R-CHIP		SA
	2007-000683	R-CHIP		SA
	2007-000729	R-CHIP;300ohm,5%,1/16W,DA,TP,160		SA
	2007-000965	R-CHIP;5.1Kohm,5%,1/16W,DA,TP,16		SA
	2007-001002	R-CHIP;510ohm,5%,1/10W,TP,1608		SA
	2007-001044	R-CHIP;56ohm,5%,1/16W,DA,TP,1608		SNA
	2007-001073	R-CHIP;6.8Kohm,5%,1/4W,TP,3216		SNA
	2007-007004	R-CHIP		SA
	2007-007445	R-CHIP;9.09Kohm,1%,1/16W,DA,TP,1608		SNA
	2007-007726	R-CHIP;35.7OHM,1%,1/16W,DA,TP,1608		SA
	2011-001011	R-NETWORK;10Kohm,5%,63mW,L,CHIP,8P,TP		SNA
	2011-001094	R-NETWORK;39ohm,5%,63mW,L,CHIP,8		SA
	2011-001334	RC-NETWORK		SNA
	2203-000041	C-CERAMIC,CHIP;0.01NF,0.25PF,50V,C0G,TP,		SA
	2203-000189	C-CER,CHIP;100nF,+80-20%,25V,Y5V,TP,1608		SA
	2203-000206	C-CERAMIC,CHIP;100nF,10%,50V,X7R		SA
	2203-000236	C-CERAMIC,CHIP;0.1nF,5%,50V,NP0,		SA
	2203-000257	C-CERAMIC,CHIP;10nF,10%,50V,X7R,		SA
	2203-000384	C-CERAMIC,CHIP;0.015nF,5%,50V,NP0,TP,160		SA
	2203-000440	C-CERAMIC,CHIP;1nF,10%,50V,X7R,T		SA
	2203-000626	C-CERAMIC,CHIP;0.022nF,5%,50V,NP		SA
	2203-000681	C-CERAMIC,CHIP;0.027nF,5%,50V,NP0,TP,160		SNA
	2203-000783	C-CERAMIC,CHIP;0.33NF,5%,50V,C0G,TP,1608		SA
	2203-001607	C-CERAMIC,CHIP;0.22nF,5%,50V,NP0		SA
	2203-001683	C-CERAMIC,CHIP;0.068nF,5%,50V,NP0,TP,160		SA
	2203-002392	C-CERAMIC,CHIP;220nF,+80-20%,50V		SA
	2203-002398	C-CERAMIC,CHIP;22nF,10%,50V,X7R,TP,1608		SA
	2402-000176	C-AL,SMD		SA
	2402-001042	C-AL,SMD;100uF,20%,16V,GP,TP,6.6x6.6x5.4		SA
	2402-001106	C-AL,SMD		SA
	2703-000158	INDUCTOR-SMD		SNA
	2901-001178	FILTER-EMI SMD;25V,2A,-,100000pF		SA
	3301-000317	CORE-FERRITE BEAD;AB,2x1.25x0.9m		SA
	3301-000325	CORE-FERRITE BEAD		SNA
	JC13-00014C	IC ASIC-SPGPM(3);SPGPM_D,SCX-6320F,256PI		SA
	JC41-00235A	PCB-MAIN (4LAYER);ML-2250,FR-4,4,-,1.6T,		SNA
	6003-000266	SCREW-TAPTITE		SNA
	JC68-01451A	LABEL-MAC ADDRESS;ML-00LA/SEE,SEC,ART,0.		SNA
	0501-000279	TR-SMALL SIGNAL;KSA1182-Y,PNP,150mW,SOT-		SA
	0601-001332	LED;CBI,GRN,2.9mm,567nm		SNA
	0601-001619	LED;CBI,RED/GRN,3MM,635/568NM,6.35X7X6MM		SA
	2801-004082	CRYSTAL-UNIT		SNA

ITSERVICES.eu

SA : Service Available, **SNA** : Service not Available

Draw#	Part Code	Description	Location	SNA
	3702-001102	CONNECTOR-RIBBON;60P,FEMALE,STRAIGHT,AU		SNA
	3722-001319	JACK-MODULAR;8P/8C,STANDARD,Y,ANGLE,INVE		SA
	JC94-00469A	PHANTOM AU JC92-01466A		SNA
	0801-002095	IC-CMOS LOGIC;74LCX245,BUFFERS,TSSOP,20P		SNA
	0801-002669	IC-CMOS LOGIC;74VHC27,NOR GATE,SOIC,14P,		SNA
	1103-001279	IC-EEPROM		SA
	1105-001390	IC-DRAM		SA
	1107-001286	IC-FLASH MEMORY;29LV160,2Mx8Bit,TSOP,48P		SNA
	1203-002220	IC-POSI.ADJUST REG.;LD1117,DPAK,3P,240MI		SA
	1205-002240	IC-TRANSCEIVER;ICS1893Y-10,TQFP,64P,10X1		SNA
	2007-000070	R-CHIP;0ohm,5%,1/10W,TP,1608		SA
	2007-000076	R-CHIP;330ohm,5%,1/16W,DA,TP,1608		SA
	2007-000078	R-CHIP		SA
	2007-000090	R-CHIP		SA
	2007-000113	R-CHIP;33ohm,5%,1/16W,DA,TP,1608		SA
	2007-000475	R-CHIP;1Mohm,1%,1/10W,TP,1608		SA
	2007-000539	R-CHIP;200ohm,5%,1/16W,DA,TP,160		SA
	2007-000669	R-CHIP;2Kohm,1%,1/16W,DA,TP,1608		SA
	2007-002901	R-CHIP;12.1Kohm,1%,1/10W,TP,1608		SA
	2007-007233	R-CHIP		SNA
	2007-007611	R-CHIP		SNA
	2007-007613	R-CHIP		SNA
	2007-008499	R-CHIP;1.54K ohm,1%,1/10W,TP,1608		SNA
	2011-001094	R-NETWORK;39ohm,5%,63mW,L,CHIP,8		SA
	2203-000041	C-CERAMIC,CHIP;0.01NF,0.25PF,50V,C0G,TP,		SA
	2203-000189	C-CER,CHIP;100nF,+80-20%,25V,Y5V,TP,1608		SA
	2203-000236	C-CERAMIC,CHIP;0.1nF,5%,50V,NP0,		SA
	2203-000257	C-CERAMIC,CHIP;10nF,10%,50V,X7R,		SA
	2203-000384	C-CERAMIC,CHIP;0.015nF,5%,50V,NP0,TP,160		SA
	2203-000440	C-CERAMIC,CHIP;1nF,10%,50V,X7R,T		SA
	2203-000626	C-CERAMIC,CHIP;0.022nF,5%,50V,NP		SA
	2203-000903	C-CER,CHIP;0.0047NF,0.25PF,50V,C0G,TP,16		SNA
	2404-000284	C-TA,CHIP;10uF,20%,16V,-,TP,3528		SA
	2703-001859	INDUCTOR-SMD;120nH,10%,1608		SA
	JC13-00015A	IC ASIC-WIRELESS LAN;NETONE,ML-8550N,180		SA
	JC41-00182A	PCB SUB-NPC3_PRT;ML-2150,FR-4,4 LAYER,-,		SNA
	JF68-10532B	LABEL(P)-BAR CODE		SNA
	0205-000005	GREASE-BEARING;EP56,-,-		SNA
	6001-000131	SCREW-MACHINE		SNA
	6031-000023	WASHER-PLAIN;-,ID5.9,OD10.0,T0.5		SNA
	JC96-03113B	ELA HOU-SMPS		SA
	JC61-00915A	STOPPER-M-PICK UP_R2;SCX-4920,POM(M90-44	K3752	SNA
	JC61-00937A	GUIDE-M-KNOCK UP;ML-1750,POM,-,60,15,-,-	P5146	SA
	JC66-00720A	SHAFT-P-CORE;ML-1750,SECC 1.6T,220,-,-,-	P2158	SNA
	JC72-00982A	PMO-IDLE PICK_UP;ML-1400,POM(M90-44),NTR	P2131	SNA
	JC61-00035A	SPRING-HV APOLLO;SF-5100,SUS304W		SNA
	JC70-00050A	IPR-TERMINAL;SF-5100,SWRCH,4.4,N		SNA
	0604-001210	PHOTO-INTERRUPTER;TR,-,200mW,DIP-4,ST		SNA
	JC39-00184A	CBF HARNESS-ADF_DET SEN.	H1032	SA
	JC41-00247A	PCB-SENSOR B'D;SCX-4920N,FR-1,1,-,1.6T,3		SNA
	0601-001908	LED;ROUND,RED,3MM,630NM,3.2X4.6MM		SNA
	JC39-00373A	CBF HARNESS-PTL	H1212	SA

ITmanres.eu

SA : Service Available, **SNA** : Service not Available

Draw#	Part Code	Description	Location	SNA
	JC41-00171B	PCB-PTL (1LAYER)		SNA
	0105-001032	PAPER-ART;75g,W210,-,WHITE,HANSO		SNA
	6003-000196	SCREW-TAPTITE;PWH,+,B,M3,L10,NI		SA
	6003-000269	SCREW-TAPTITE;BH,+,S,M3,L6,ZPC(Y		SA
	JC66-00396A	GEAR-IDLE 23;ML-1400,POM(M90-44),0.8,23,	G0256	SA
	JC61-00912A	HOLDER-M-ACT MANUAL R2;SCX-4920,ABS,-,47	H4020	SA
	0205-001056	GREASE-GRAPHITE;CRS841,WHT,-		SNA
	JC97-01930A	MEA UNIT-ROLLER EXIT;SCX-4920N,DELL,-,RO		SA
	0201-001183	ADHESIVE-AA;ARON ALPHA #202F,NTR,100,20G		SNA
	0205-001003	GREASE-BEARING;NYOGEL788,DAMPING		SNA
	0205-001067	GREASE-GRAPHITE;NYOGEL 756G,HYDR		SNA
	6002-000175	SCREW-TAPPING		SNA
	6003-000119	SCREW-TAPTITE		SA
	6006-001078	SCREW-TAPTITE		SNA
	6031-001051	WASHER-PLAIN;M4,ID4.1,OD7.0,T0.1	S2004	SNA
	6044-000001	RING-CS;ID3,OD3,T0.25,BLACK,SUS304	D4088	SNA
	6501-000004	CABLE TIE;DA-80,T1,W2.5,L80,NTR,	K2756	SA
	6502-001093	CABLE CLAMP;DAWS-3NE,ID11*L34.8,-,NYLON6	C0014	SNA
	0205-001003	GREASE-BEARING;NYOGEL788,DAMPING		SNA
	6003-000196	SCREW-TAPTITE;PWH,+,B,M3,L10,NI		SA
	JC97-02034A	MEA-PICK UP_MP;ML-2250,SEC,-,PICK UP-MP		SA
	JC61-00910A	HOUSING-M-PICK UP2_R2;SCX-4920,PC,-,53,2	M2078	SA
	JC61-00925A	HOUSING-M_PICK UP_MP;ML-2250,PC,-,20,30,		SA
	JC73-00194A	RUBBER-PICK UP MP;SCX-4720F,EPDM + IR,-,	P2148	SA

IT-Spares.eu